PLACEMENT CHART

PART #	HEIGHT (A)	LENGTH (B)	OFFSET (C)	OFFSET (D)
JP048401	38.125	2.50	1.50	NO UPPER
JP048402	51.50	2"	.50	NO UPPER
JP048403	43.50	.50/CUT TUBE @ .375"	2.50	34.50
JP048404	39.625	9	2.50	30.50
CUSTOM ORDER				

REVISIONS - 0 BALLOONS DENOTE CHANGES

REV.	DESCRIPTION	DATE	APPROVED
A		1/26/2021	ZAG
A	ADDED JP048402	5/5/2021	ZAG
C	ADDED JP048403	7/22/2021	ZAG
D	ADDED JP08404	4/18/2022	DRC

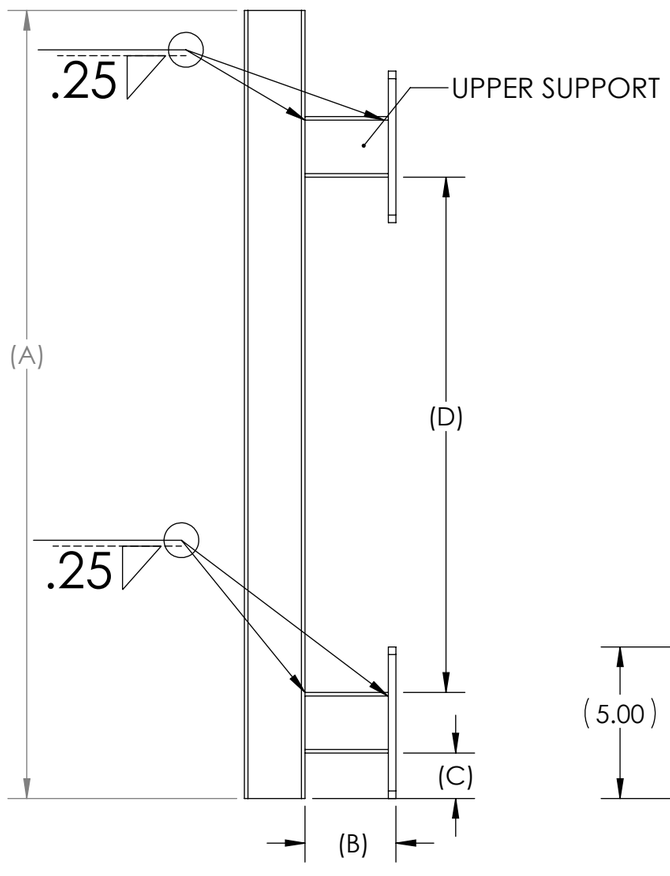

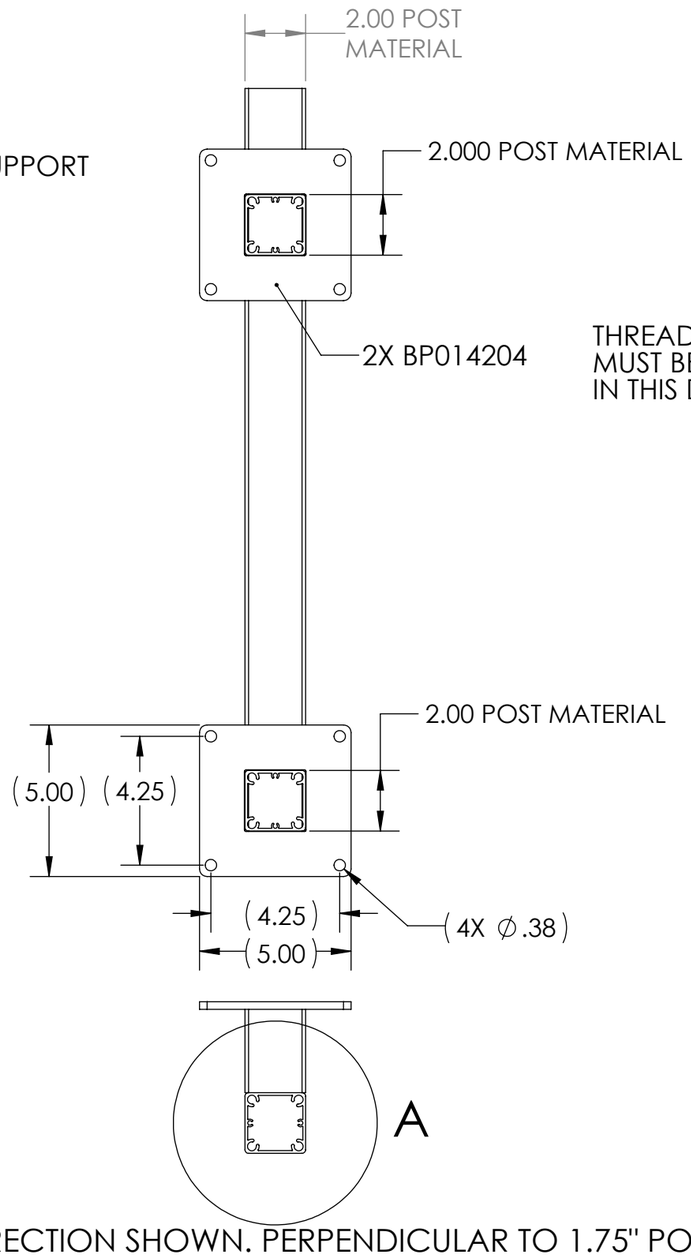

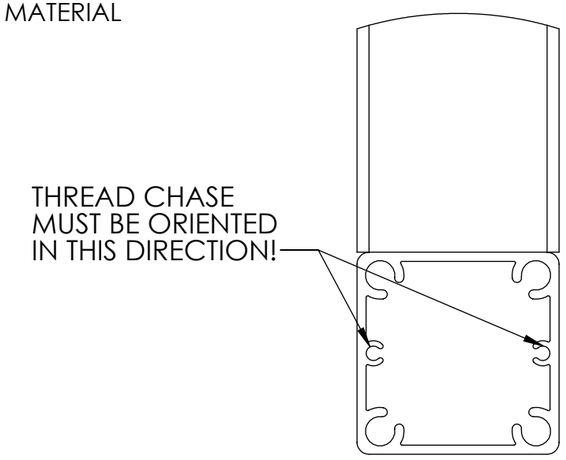

DETAIL A

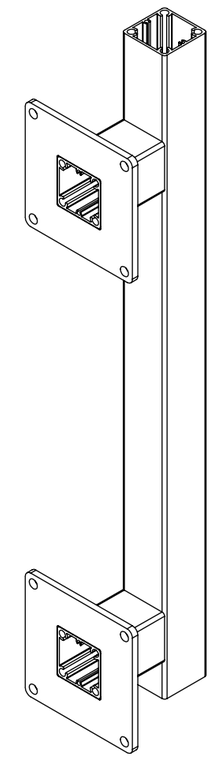

NOTE:
1. ENDS TO BE FREE OF BURRS.
2. REMOVE ALL WELD SPATTER.
3. SCREW CHASE MUST BE ORIENTED IN DIRECTION SHOWN. PERPENDICULAR TO 1.75" POST STUBS.

UNLESS OTHERWISE SPECIFIED:		NAME	DATE
DIMENSIONS ARE IN INCHES TOLERANCES: SURFACE FINISH: 125 RMS ANGULAR: .5° TWO PLACE DECIMAL ± .020 THREE PLACE DECIMAL ± .010	DRAWN	ZAG	1/26/21
	CHECKED		
	ENG APPR.		
	MFG APPR.		
INTERPRET GEOMETRIC TOLERANCING PER:	THIRD ANGLE PROJECTION:		
MATERIAL			
FINISH			
DO NOT SCALE DRAWING			

PROPRIETARY AND CONFIDENTIAL
THE INFORMATION CONTAINED IN THIS DRAWING IS THE SOLE PROPERTY OF UltraLox. ANY REPRODUCTION IN PART OR AS A WHOLE WITHOUT THE WRITTEN PERMISSION OF UltraLox IS FORBIDDEN.

ULTRALOX RAILING SYSTEMS

TITLE: WELDMENT DRAWING, 2" POST JULIETTE, WITH 2" POST SUPPORTS

SIZE	DWG. NO.	REV
B	JP048400	D

SCALE: 1:8 | WEIGHT: | SHEET 1 OF 1